Shree Shanti Honda

Introducing

ACTIVA 110

Anniversary Edition

25 Anniversary
Honda Two Wheelers India
2001 - 2025

Thank You India

Introduction

Introducing the Honda Activa
25th Anniversary Edition* where unparalleled reliability meets a fresh new look.
Experience real-time updates, intelligent features, and a new aesthetic design for a smooth and enjoyable ride.

*The 25th Annviversary edition is available for Activa 110's Deluxe variant only.

Smart design, Stylish presence.

Make a style statement with your Activa 110's special 25th Anniversary design and stand out in every crowd.

Anniversary Graphics and special black chrome

Featuring a sleek black chrome and an exclusive anniversary graphic on the side panel, allowing you to stand out.

25 Year Anniversary Logo

Aesthetically designed logo on the front of the Activa 110 showcasing 25th Anniversary.

Front and Rear Alloy Wheels

Upgrade the appearance of your Activa with Pyrite Brown Metallic alloy wheels in brand-new cool colours, which provide enhanced stability and durability.

Seat and Inner Panel

Sophisticated, premium feel, and enhanced appeal with an elegant premium brown seat and inner panel in (Activa 110 Pearl Siren blue) and black seat and inner panel in (Activa 110 Matte Steel Black Metallic).

LED Headlamp and Signature LED Position Lamp

The elegant LED headlamp with a signature position lamp elevates the Activa 110's style to new heights.

Striking Tail Lamp

Grab attention of every viewer and leave a lasting impression with a stylish tail lamp design.

Smart Technology

The Activa110 is packed with cutting-edge smart features and the latest technology to enhance your riding experience.

TFT Screen Display

The Activa's fully loaded meter features a superb display for great daytime and nighttime visibility, with its 10.67cm TFT display, which also provides multi-angle viewing and ensures high image quality. The screen also features three adjustable brightness levels.

Idling Stop System

Activa 110's Idling Stop System optimizes fuel efficiency by intelligently adapting to your riding patterns.

Efficiency, Fine Tuned

The Activa features a TFT meter to monitor fuel consumption, efficiency, and remaining distance during your ride.

Live Mileage Indicator

It displays live fuel efficiency throughout the ride.

Average Mileage

It displays overall fuel consumption during the trip.

Range

It displays the distance you can travel with remaining fuel in the tank.

Eco-Indicator

Tracks real-time driving conditions to maintain fuel efficiency on a real-time basis.

PGM-FI FUEL INJECTION

Intelligent PGM-FI system for optimum air-fuel ratio that provides superior performance, fuel savings, and reliable starts in any weather and lowered emissions.

Powerful 110cc Engines

Top-tier power and acceleration to make rides exciting.

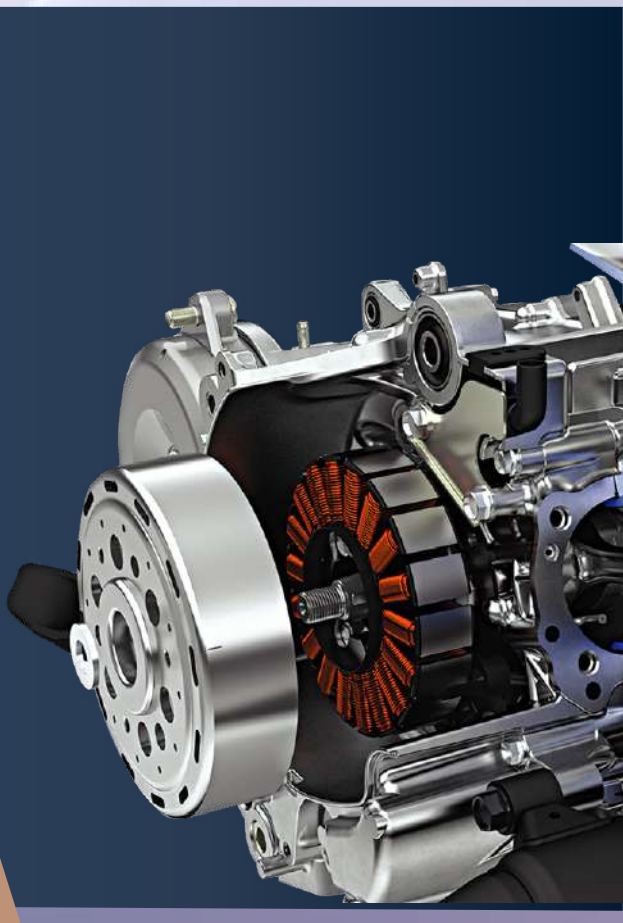

Silent Start with ACG

Experience smooth and silent starts with reduced gear noise and maintenance.

ESP ENHANCED SMART POWER

Experience advanced technology that enhances combustion, performance and fuel efficiency like never before.

Reliability & Comfort

With Honda's ever-trusted legacy, the Activa ensures every ride is smooth, dependable, and comfortable.

Open Glove Box

A spacious open glove box provides extra storage for essentials.

15W USB-C Port

Charge your smartphone, earphones, power bank on-the-go, with all device compatibility.

Double Lid External Fuel Fill

Refuel while seated, thanks to the convenience of double-lid fuel access.

Safety

Supported by Honda's strong legacy, the Activa ensures that every ride is smooth, reliable, and comfortable.

*Side Stand Engine Cut-Off**

When the side stand is open the side stand engine Cut-off prevents the engine from starting.

Telescopic Front Suspension

Every ride made extra comfortable with telescopic front suspension.

*Side stand shown in the image is not a part of standard fitment in Activa 110cc.

Fuel-Efficient Tubeless Tyres

Enhanced grip, better mileage, and safer rides with Honda's advanced technology.

Exclusive colour scheme.

The 25th Anniversary Activa110 deserves to be noticed. These bold new colours will make heads turn and have you stand out.

ACTIVA 110

Anniversary Edition

Technical Specification+

Body Dimensions

Length	1833 mm
Width	677 mm
Height	1165 mm
Wheel Base	1260 mm
Ground Clearance	162 mm
Seat Length	692 mm
Kerb Weight	Dlx - 106 kg
Fuel Tank Capacity	5.3 L

Engine

Type	4 Stroke, SI Engine
Displacement	109.51 cc
Max Engine Output	5.88kW @ 8000 rpm
Max Torque	9.05 Nm @ 5500 rpm
Bore X Stroke	47.10 mm x 63.10 mm
Compression Ratio	10.0:1
Fuel System	PGM - FI
Air Filter Type	Viscous Paper Filter
Starting Method	Dlx. - Kick/Self

Transmission

Clutch Type	Automatic (V-Matic)

Tyres & Brakes

Tyre size & Type (Front)	90/90-12 54J, Tubeless
Tyre size & Type (Rear)	90/100-10 53J, Tubeless
Brake Type & Size (Front)	Drum 130 mm
Brake Type & Size (Rear)	Drum 130 mm

Frames & Suspensions

Frame Type	Under Bone
Front Suspension	Telescopic
Rear Suspension	3-Step Adjustable Unit Swing

Electricals

Battery	12 V 5.0 Ah (MF)
Head Lamp	Dlx. - LED

+The technical specifications and design of the vehicles may vary according to the requirements and conditions without any notice. All features may not be part of all variants. Terms and conditions apply.

Honda Motorcycle and Scooter India Pvt. Ltd.

Registered Office: Plot No. 1 , Sector - 03, IMT Manesar, Distt. Gurugram, (Haryana) – 122050, India

Shree Shanti Honda
Fast access Building, Burdwan Road Siliguri
Siliguri
Tel: 9144411171
Mob: 9144411172

For more details:

Visit us at: www.honda2wheelersindia.com | Customer Care: customercare@honda.hmsi.in

Follow us at :

honda2wheelers.in | honda2wheelerin | honda2wheelersin | honda2wheelerin